ATK-CLIMX91S

Core Board User Manual

V1.0

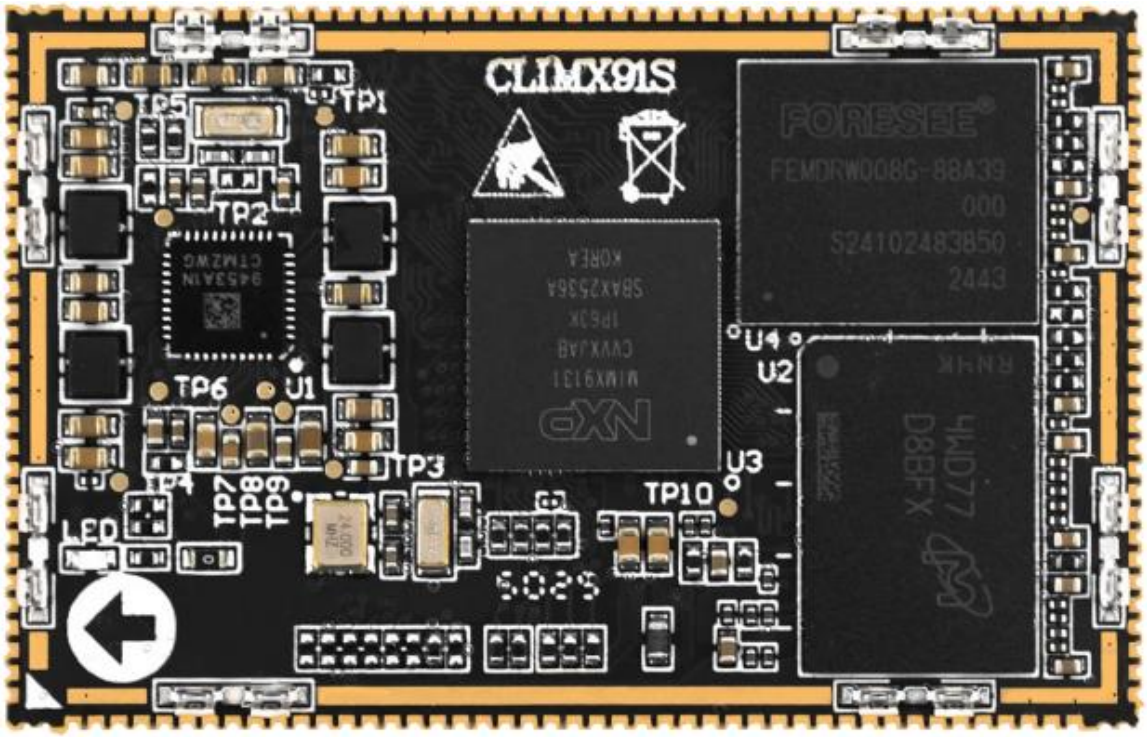

ALIENTEK

1. Shopping:

TMALL: https://zhengdianyuanzi.tmall.com

TAOBAO: https://openedv.taobao.com

2. Download

Address: http://www.openedv.com/docs/index.html

3. FAE

Website : www.alientek.com

Forum : http://www.openedv.com/forum.php

Videos : www.yuanzige.com

Fax : +86 - 20 - 36773971

Phone : +86 - 20 - 38271790

Disclaimer

The product specifications and instructions mentioned in this document are for reference only and subject to update without prior notice; Unless otherwise agreed, this document is intended as a product guide only, and none of the representations made herein constitutes a warranty of any kind. The copyright of this document belongs to Guangzhou Xingyi Electronic Technology Co., LTD. Without the written permission of the company, any unit or individual shall not be used for profit-making purposes in any way of dissemination.

In order to get the latest version of product information, please regularly visit the download center or contact the customer service of Taobao ALIENTEK flagship store. Thank you for your tolerance and support.

Revision History:

Version	Version Update Notes	Responsible person	Proofreading	Date
V1.0	release officially	ALIENTEK Linux Team	ALIENTEK Linux Team	2026.04.01

Catalogue

Brief 1
Chapter 1. Minimum System Design 2
1.1 Power Supply Circuit 2
1.1.1 Description of 5V Power Conversion Circuit 2
1.1.2 Description of 3.3V Power Conversion Circuit 2
1.1.3 Description of 1.8V LDO Regulator Circuit 3
1.2 BOOT Configuration Circuit 3
1.3 Reset Circuit 4
1.4 System Firmware Flashing Circuit 5
1.5 UART Debug Circuit 6

Brief

This document is mainly compiled based on the test results of the ATK-DLIMX91S development board baseboard, and is applicable to stamp-hole core boards.

For peripheral resources of the core board, please refer to 【*ALIENTEK*】*ATK-CLIMX91S Core Board Datasheet*.

Meanwhile, the pin multiplexing information of the core board can be found in 【*ALIENTEK*】*ATK-CLIMX91S Core Board Interface Datasheet*.

The above two PDF documents are available in the directory of Disk A of the IMX91 development board:

A-Basic Information\06 Hardware Documents\05 Core Board Materials.

These documents will help you understand the features and pin assignment of the core board in detail.

Chapter 1. Minimum System Design

1.1 Power Supply Circuit

1.1.1 Description of 5V Power Conversion Circuit

The 12V DC input power rail VCC12V_DCIN is stepped down by the synchronous buck regulator U1 to generate a 5V power output, with the power net named VCC_5V.

U1 adopts a synchronous Buck topology. Its peripheral circuits form a complete step-down system, consisting of input filter capacitors, bootstrap capacitor, inductor, output filter capacitors and feedback voltage divider network.

Among them, the inductor L1 and output filter capacitors jointly realize energy storage and filtering functions to ensure stable output voltage. The feedback resistors R7 and R8 are used to set the output voltage. Capacitor C9 is applied for loop compensation and feedforward optimization, so as to improve system stability and transient response performance. According to the feedback voltage division parameters, the designed output voltage is approximately 5V.

A TVS diode D1 is configured at the 5V power output terminal to provide surge and transient overvoltage protection for the power bus, and improve the power supply reliability of external interfaces and on-board loads. Meanwhile, a power indicator circuit composed of current-limiting resistors and LEDs is designed in the circuit to indicate the operating status of the 5V power output.

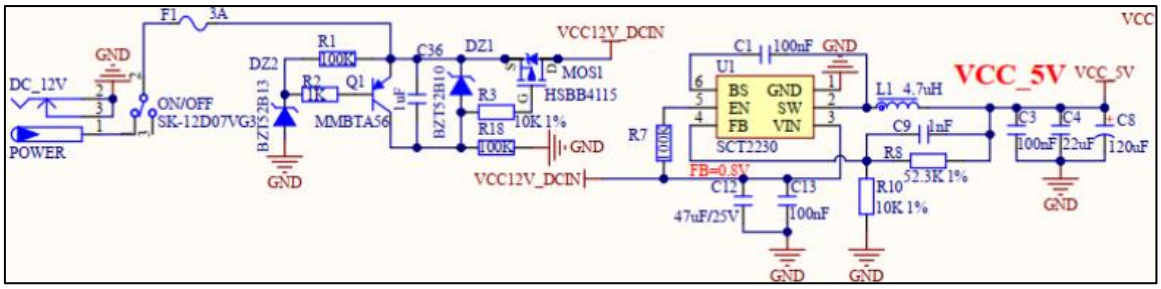

Figure 1.1-1 5V Power Conversion Circuit

1.1.2 Description of 3.3V Power Conversion Circuit

VCC12V_DCIN is also stepped down by the second step-down switching regulator U2 to generate a 3.3V power output, and the power network is marked as VCC_3V3. This circuit also adopts a synchronous Buck architecture, with peripherals including input filter capacitors, bootstrap capacitor, inductor, output filter capacitors and feedback voltage divider network.

The inductor L2 and output filter capacitors undertake voltage reduction, energy storage and output filtering. Feedback resistors R11 and R9 are used to set the output voltage, while capacitor C10 is adopted to compensate and optimize the feedback loop. According to the feedback voltage division relation, the designed output voltage is approximately 3.3V.

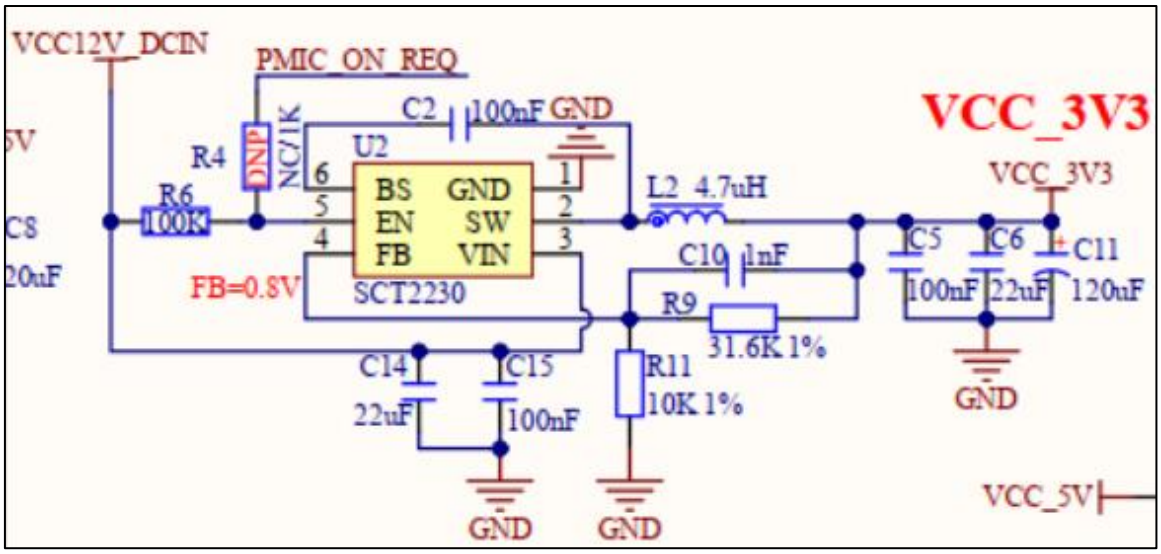

Figure 1.1-2 Description of 3.3V Power Conversion Circuit

1.1.3 Description of 1.8V LDO Regulator Circuit

The 1.8V power supply of the development board is further converted from VCC_3V3 by the low-dropout linear regulator U7, and the output power network is designated as VCC_1V8. This circuit adopts a fixed 1.8V output LDO chip. It features a simple structure and is suitable for low-voltage power supply scenarios with certain requirements on power noise and ripple.

Input decoupling capacitors are arranged at the LDO input terminal to filter the noise of the preceding power supply and stabilize the input voltage. Capacitors are configured at the output terminal to ensure the stability of the regulator loop and reduce output ripple. The EN enable pin is pulled up to VCC_3V3 through a resistor and kept enabled by default. Therefore, the 1.8V power supply can be automatically established after the 3.3V power supply outputs normally.

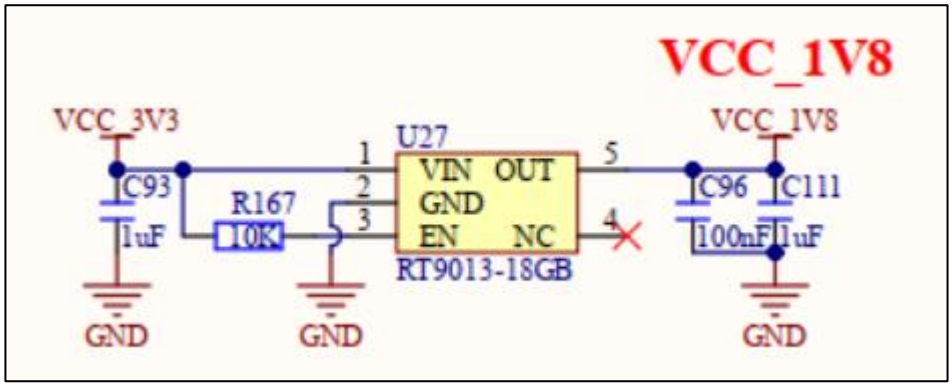

Figure 1.1-3 1.8V Linear Regulator Circuit

1.2 BOOT Configuration Circuit

The development board is equipped with an on-board BOOT boot mode configuration interface circuit, as shown in the schematic diagram below.

BOOT DEVICE	BOOT CORE	BOOT0	BOOT1	BOOT2	BOOT3
USB	Cortex-A55	1	1	0	0
EMMC	Cortex-A55	0	0	0	0
SD Card	Cortex-A55	1	0	0	0

Figure 1.2-1 Boot Mode Configuration Interface

The i.MX91 processor on the core board supports multiple boot modes, including booting from EMMC, SD card and USB.

In this circuit, the four BOOT pins are pulled up by the core board-derived NVCC_AON power supply (3.3V). When the corresponding DIP switch is toggled to the ON position, the potentials on both sides of the switch are conducted, and the corresponding BOOT pin is pulled high and configured as logic **1**; otherwise, it is logic **0**.

By configuring the BOOT pins with different high/low level combinations (1 or 0), different boot modes can be switched. The boot modes supported by the baseboard are configured as follows:

BOOT0	BOOT1	BOOT2	BOOT3	Boot Core	Boot Mode
1	1	0	0	Cortex-A55	USB Boot
0	0	0	0		EMMC card Boot
1	0	0	0		SD Boot

Please pay attention to the sequence of the BOOT pin numbers and do not toggle the DIP switches in reverse order.

When the i.MX91 core processor is set to **USB Boot** mode, it enters the flashing mode for re-burning the system image. Users can select to program the image into the eMMC storage chip or SD card according to software configuration.

In **eMMC Boot** mode, the processor reads and runs the system firmware stored in the eMMC chip.

In **SD Card Boot** mode, the processor boots and executes the system firmware stored in the SD card.

In addition, for the pull-up power supply of BOOT pins, it is recommended to follow this circuit design and adopt the core-board-derived NVCC_AON (3.3V) power supply, instead of other on-board 3.3V power rails.

If other on-board 3.3V power supplies are used, the slow power-up sequence may cause the processor to fail in sampling the BOOT level configuration, further resulting in system image boot failure.

1.3 Reset Circuit

The schematic diagram of the reset circuit of the ATK-DLIMX91S development board is shown below.

The RESET key is used to reset the core board. The RESET signal pin is connected to the PMIC_RST_B control pin of the core board PMIC power management chip, which is used to power cycle the PMIC. Thereby, core board devices such as the processor, LPDDR4 and eMMC are powered on again. The reset level is active-low.

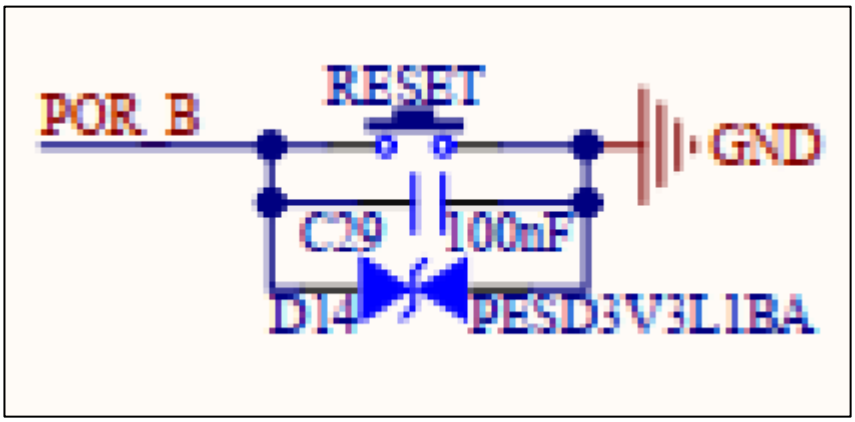

Figure 1.3-1 Reset Circuit

1.4 System Firmware Flashing Circuit

The development board is equipped with an on-board USB_OTG interface in USB Type-C form factor, whose schematic diagram is shown below.

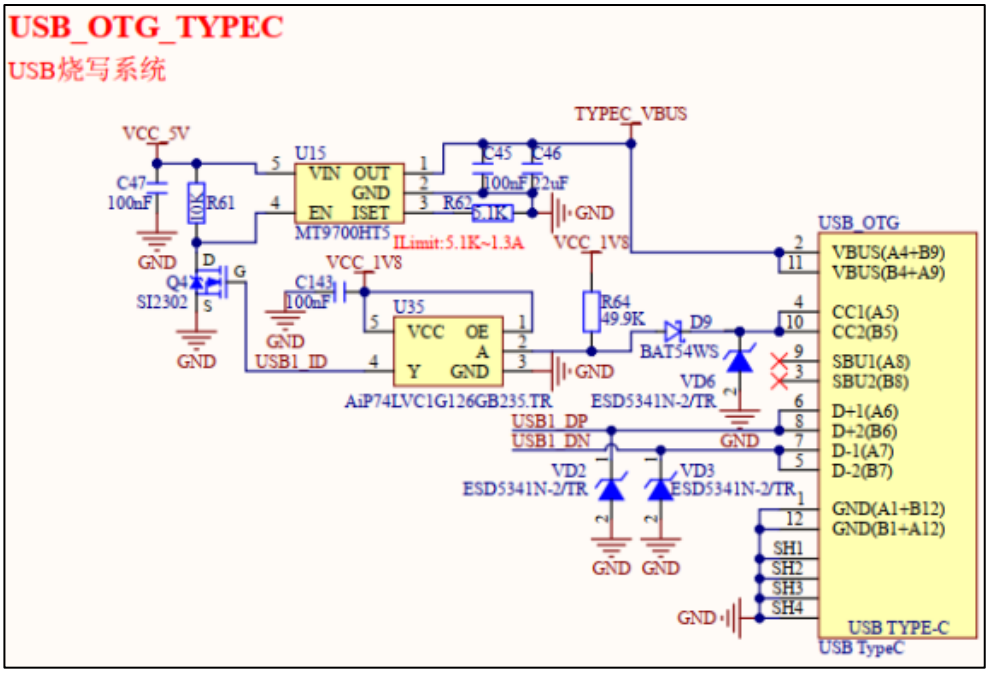

Figure 1.4-1 USB_OTG Interface

The i.MX91 processor on the core board supports entering download mode via the USB OTG interface for system image and firmware flashing.

This circuit adopts a USB Type-C interface, which can be used not only for system firmware burning, but also for connecting external USB OTG devices to realize dual-role USB host and device functions.

In the circuit, USB1_DP and USB1_DN are directly connected to the D+ and D- pins of the Type-C interface to complete USB data transmission.

CC1 and CC2 are connected to U35 (AiP74LVC1G126) through the detection circuit. After buffering and level conversion, the USB1_ID signal is output for the processor to identify the current connection status and USB host/device role.

U15 (MT9700) in the figure is a VBUS current-limiting switch chip. Its input terminal is connected to VCC_5V, and the output terminal is connected to TYPEC_VBUS to supply 5V power to the Type-C interface.

When the processor works in Host mode, U15 is enabled to output VBUS power for external USB devices. When the processor works in Device mode, U15 is disabled without external 5V power output. This design meets the requirements of USB OTG role switching and peripheral power supply control.

In addition, ESD protection devices are added to USB data lines and CC detection lines, and the interface shield shell is grounded, which effectively improves the ESD resistance and operational reliability of the interface.

1.5 UART Debug Circuit

The development board integrates an on-board UART debug interface with a USB Type-C connector. The corresponding schematic is shown in the figure below.

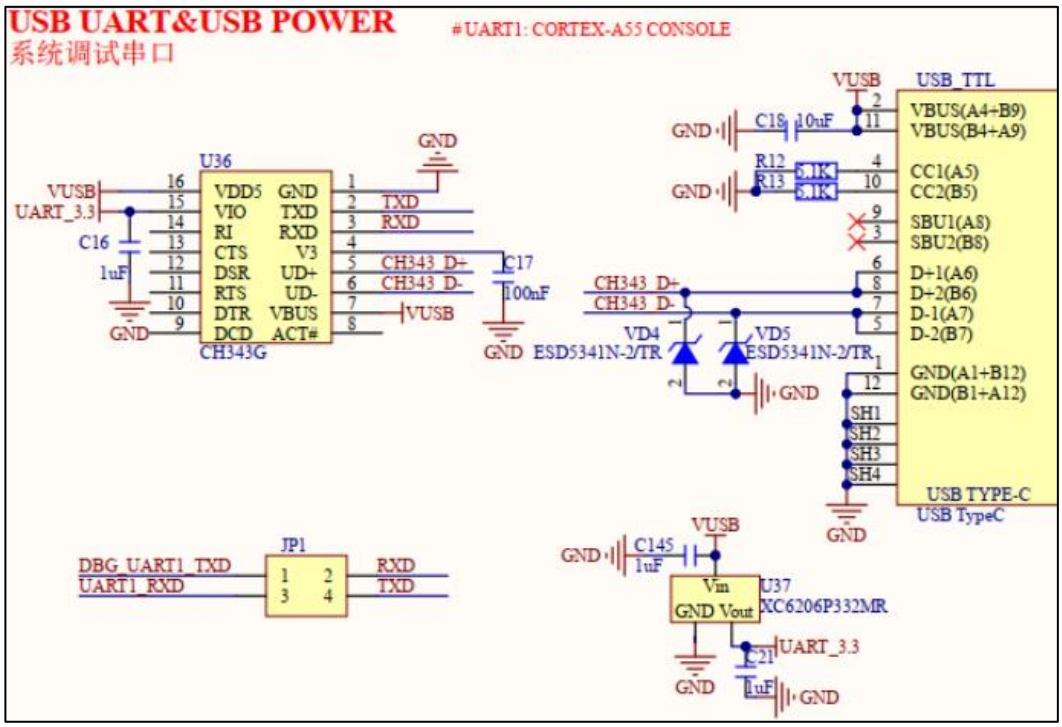

Figure 1.5-1 UART Debug Serial Port

The development board uses UART1 as the system debug serial port to output boot information and system console data. To facilitate user debugging, this circuit adopts the CH343G USB-to-UART chip to realize USB to UART conversion. Users can complete data transmission and reception between the host computer and the i.MX91 debug serial port with only one USB Type-C cable.

U36 in the schematic is the CH343G chip. Its USB port is connected to the USB Type-C debug interface, and its serial port is connected to the UART1 signals of the i.MX91 processor. After the Type-C cable is plugged in, the 5V USB input power (VUSB) is stepped down by U37 (XC6206P332MR) to 3.3V, which supplies power for the CH343G and related peripheral circuits.

To enhance interface reliability, ESD protection components are added to USB D+ and D- data lines. The CC1 and CC2 pins of the Type-C interface are pulled down to GND through 5.1kΩ resistors, configuring the interface as a standard USB device. The TXD and RXD signals output by CH343G are connected to i.MX91 UART1 via pin headers, facilitating debug connection and signal switching.